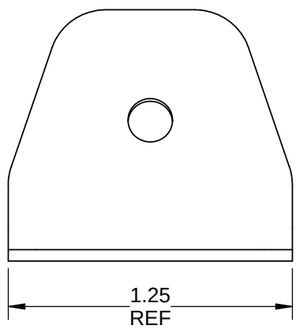

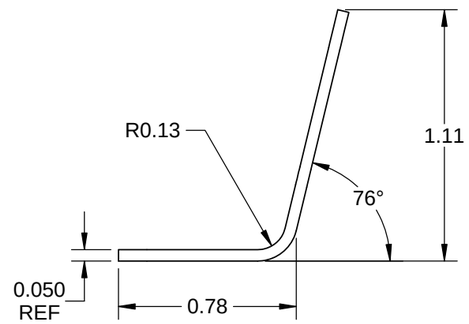

D4795-1 BRACKET
MAKE FROM D4795-3F

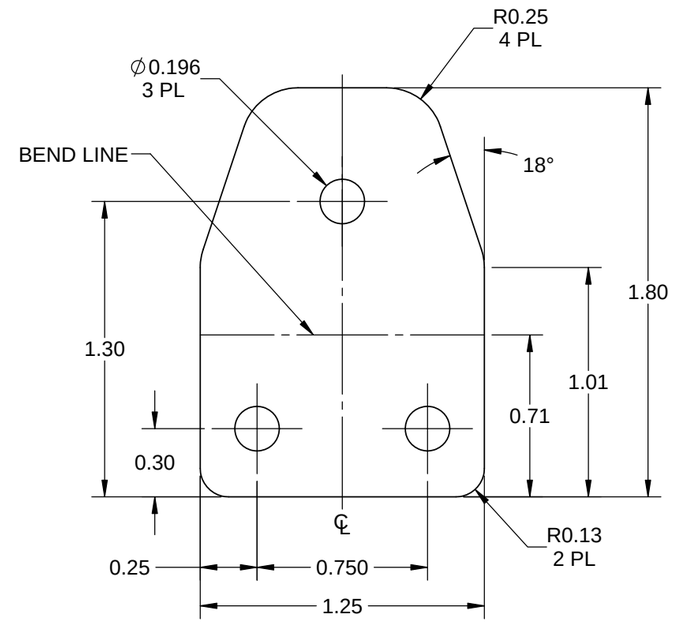

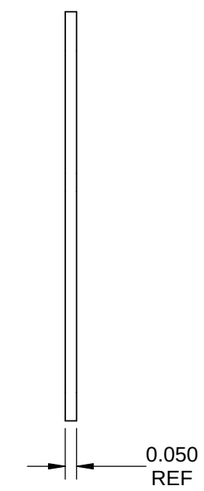

D4795-1F FLAT PATTERN BRACKET

PRELIMINARY ISSUE

RF 13.03.02

NOTES:
1) MATERIAL: 303/304/316 STAINLESS STEEL SHEET ANNEALED 2B, 0.05 THK
PER MIL-S-5059 OR AMS 5513/5524 OR ASTM A240 OR ASME SA240
REF DART SPEC M304S18GA OR M303S18GA
2) FINISH: NONE
3) TOLERANCES: PER DART QSI 018 UNLESS OTHERWISE NOTED
4) UNITS: INCHES UNLESS OTHERWISE NOTED
5) BREAK SHARP EDGES: 0.005 TO 0.010 MAX
6) IDENTIFICATION: IDENTIFY PER QSI 006 4.1
7) WEIGHT: 0.03 lbs

REV.	DESCRIPTION	BY	DATE
PA2	NEW ISSUE	RF	13.03.02

DESIGN	RF	**DART AEROSPACE LTD** HAWKESBURY, ONTARIO, CANADA	
DRAWN	RF		
CHECKED		DRAWING NO. D4795	REV. PA2
MFG. APPR.			SHEET 1 OF 2
APPROVED		TITLE BRACKET	SCALE NTS
DE APPR.			
DATE	13.03.02		

COPYRIGHT © 2013 BY DART AEROSPACE LTD
THIS DOCUMENT IS PRIVATE AND CONFIDENTIAL AND IS SUPPLIED ON THE EXPRESS CONDITION THAT IT IS NOT TO BE USED FOR ANY PURPOSE OR COPIED OR COMMUNICATED TO ANY OTHER PERSON WITHOUT WRITTEN PERMISSION FROM DART AEROSPACE LTD.

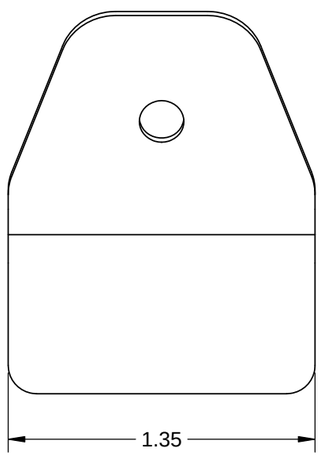

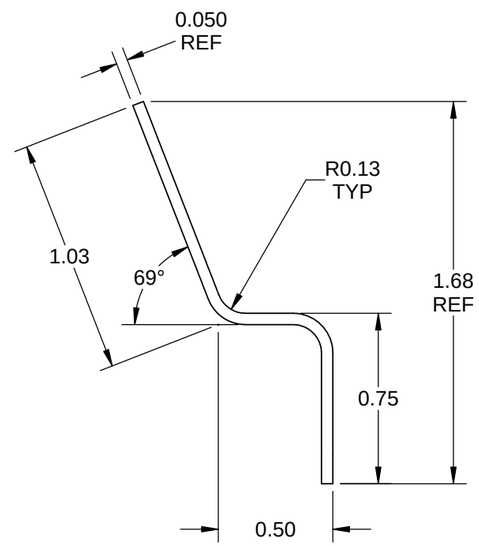

D4795-3 BRACKET
MAKE FROM D4795-3F

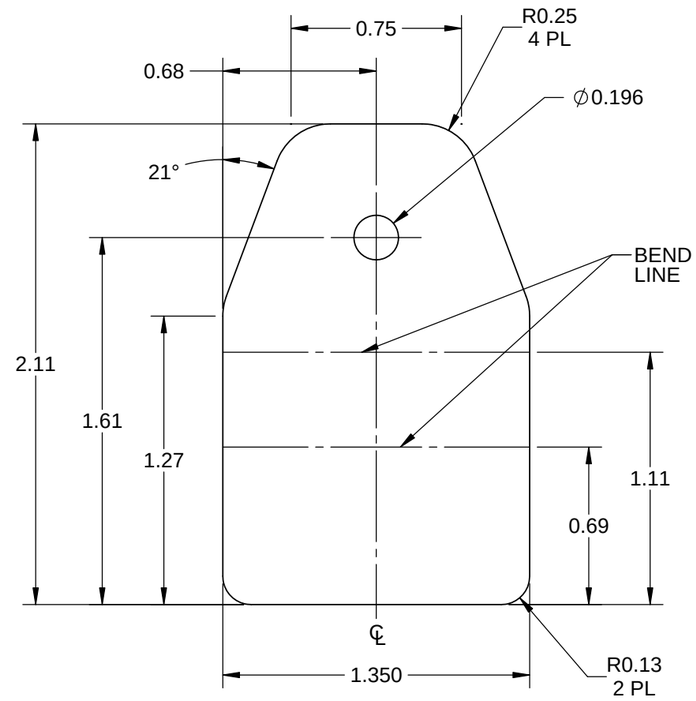

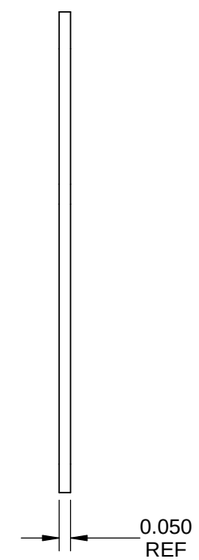

D4795-3F FLAT PATTERN BRACKET

PRELIMINARY ISSUE

RF 13.03.02

NOTES:
1) MATERIAL: 303/304/316 STAINLESS STEEL SHEET ANNEALED 2B, 0.05 THK
PER MIL-S-5059 OR AMS 5513/5524 OR ASTM A240 OR ASME SA240
REF DART SPEC M304S18GA OR M303S18GA
2) FINISH: NONE
3) TOLERANCES: PER DART QSI 018 UNLESS OTHERWISE NOTED
4) UNITS: INCHES UNLESS OTHERWISE NOTED
5) BREAK SHARP EDGES: 0.005 TO 0.010 MAX
6) IDENTIFICATION: IDENTIFY PER QSI 006 4.1
7) WEIGHT: 0.07 lbs

DESIGN	RF	**DART AEROSPACE LTD** HAWKESBURY, ONTARIO, CANADA
DRAWN	RF	
CHECKED		DRAWING NO. D4795 — REV. PA2 — SHEET 2 OF 2
MFG. APPR.		
APPROVED		TITLE BRACKET — SCALE NTS
DE APPR.		
DATE	13.03.02	

COPYRIGHT © 2013 BY DART AEROSPACE LTD
THIS DOCUMENT IS PRIVATE AND CONFIDENTIAL AND IS SUPPLIED ON THE EXPRESS CONDITION THAT IT IS NOT TO BE USED FOR ANY PURPOSE OR COPIED OR COMMUNICATED TO ANY OTHER PERSON WITHOUT WRITTEN PERMISSION FROM DART AEROSPACE LTD.